jaga CLIMATE DESIGNERS

BRIZA 22 / BRIZA 22 HP
BRIZA 26 / BRIZA 26 HP

US / CANADA

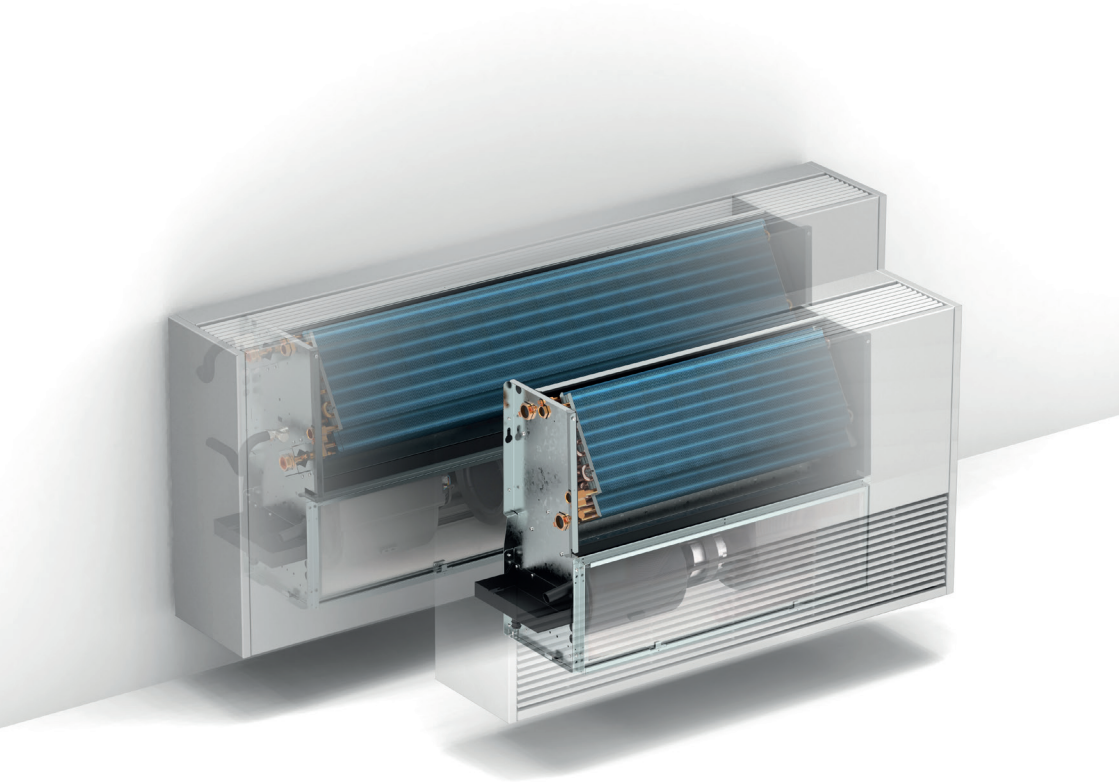

CONTENT

1. USED SYMBOLS 3
2. WARNINGS AND SAFETY 4
3. PACKAGING AND COMPONENTS 4
4. INSTALLATION 4
   4.1. ACOUSTIC INSULATION 4
5. GENERAL INFORMATION 5
   5.1. OPERATING LIMITS: 5
6. OVERVIEW 6
7. BRIZA 22 7
   7.1. DIMENSIONS WALL MOUNTED BRIZA 22 7
   7.2. DIMENSIONS CEILING MOUNTED MODEL BRIZA 22 10
8. BRIZA 26 14
   8.1. DIMENSIONS WALL MOUNTED BRIZA 26 14
   8.2. DIMENSIONS CEILING MOUNTED BRIZA 26 17
9. ELECTRICAL CONNECTION 19
   9.1. STANDARD 19
   9.2. OPTION 1 - WIRING DIAGRAM WITH EXTERNAL CONTROL AND SWITCH 20
   9.3. OPTION 2 - WIRING DIAGRAM JDPC (JAGA PRODUCT CONTROLLER) 21
   9.4. OPTION 3- WIRING DIAGRAM EVO CONTROLLER WITH EXTERNAL THERMOSTAT AND SWITCH 22
   9.5. OPTION 4- WIRING DIAGRAM JDPC (JAGA PRODUCT CONTROLLER) WITH SWITCH 23
   9.6. OPTION 5- WIRING DIAGRAM WITH OPTIONAL CONDENSATE PUMP 24
   9.7. OPTION 6- WIRING DIAGRAM WITH OPTIONAL ELECTRIC HEATER 25
10. OPERATING LIMITS 28
11. INSTALLATION 29
   11.1. WALL MOUNTED MODEL 29
   11.2. CEILING MOUNTED MODEL 31
12. FILTER REPLACEMENT 33
13. SPECIAL MAINTENANCE: REPLACING THE FAN 34
14. SPECIAL MAINTENANCE: REPLACING THE HEAT EXCHANGER 35
15. INITIAL START-UP 36
16. MAINTENANCE 36
   16.1. SPECIAL NOTE 36
   16.2. ROUTINE MAINTENANCE 36
   16.3. ELECTRICAL CIRCUIT 37
17. WARRANTY 37
18. DISSASSEMBLY INSTRUCTIONS 37
19. REFERENCE STANDARDS 38

1. USED SYMBOLS

	the DANGER sign warns the operator and maintenance staff about risks that may cause death, physical injury or illnesses of any kind.
	DANGER: ELECTRICAL HAZARD
	DANGER: SHARP EDGES
	DANGER: HOT SURFACES
	DANGER: MOVING PARTS
	ATTENTION: IMPORTANT WARNING
	the ENVIROMENTAL SAFEGUARD sign provides instructions on how to use the unit in an ECO-friendly manner.

EN

Important info
The unit must be installed by a certified installer in accordance with the installation instructions and the local building codes. Please follow this instruction manual and file it somewhere safe! The unit must always be accessible for maintenance and inspection.

The fan coil unit is intended strictly for conditioning the indoor climate. Any unintended use is strictly forbidden and voids all warranty on the product. Installation, maintenance and operation of the unit is only allowed for authorized staff.

The warranty is void when:
– the installation procedure has not been followed,
– the fan coil has not been periodically cleaned,
– the unit has been used in an improper or irresponsible manner,
– repairs have been carried out by others than Jaga,
– product modifications have been carried out by others, before or after the installation,
– the product is not accessible for cleaning or maintenance.

If you have any questions or complaints, please contact your supplier or installer. The copyright of these instructions is the property of Jaga.

2. WARNINGS AND SAFETY

Handling guidelines:

The unit must be handled with care in order to avoid damage to the unit's interior and exterior parts.

The unit might have sharp edges; use gloves during installation/adjustment.

All the operations listed below must be carried out in accordance with local health and safety regulations.

Storage conditions:

Up to four packaged units may be stacked on top of each other. All units must be stored in a dry area.

Technical spaces and positioning:

Incorrect installation of the unit may cause noise and vibrations issues.

3. PACKAGING AND COMPONENTS

Follow these instructions when removing the packaging:

- check for any visible damage
- open the packaging
- check if the manual is in the package
- remove the packaging material and put it in the appropriate collection point or recycling facility, in compliance with the local regulations.

Dispose of the packaging materials in compliance with the national or local regulations.

Do not leave the packaging within reach of children.

4. INSTALLATION

- installation must be carried out by certified technicians. Incorrect installation could cause product failure, a reduced performance or an increased noise level.
- the unit must be installed in accordance with the local building codes.
- Always use personal protective equipment.
- the unit must remain accessible for inspection and maintenance.

4.1. ACOUSTIC INSULATION

Sound absorption

Sound is reflected by hard materials. Soft, porous materials are best suited for sound absorption. A combination of different materials can reduce the reflection of sound.

Contact noise insulation

Sound travels very easily through hard materials. Soft rubber material can be used to reduce contact noise. The effect of this insulation strongly depends on:

- installation method: make sure that vibrations cannot be transferred between different elements, e.g. between the built-in heaters and other metallic parts, through pipes, along air ducts etc.
- installation of acoustic insulation in hollow acoustic spaces. Avoid cavities between insulation and pipes.
- no other materials should be in contact with the suface of the fancoil.

5. GENERAL INFORMATION

DANGER!

The unit is not intended for industrial applications.
Do not insert objects into the supply and return air openings.

IMPORTANT!

- the unit will only function correctly if the installation and operation manual is strictly followed.
- all clearances indicated in the manual must be respected in order to guarantee performance, and to allow installation and maintenance.
- in case valve packages are to be installed, make sure that there is enough room left.
- periodic access to the unit is required for inspection, maintenance and repairs.
- pay attention to the signs and symbols indicated on the fan coil units.

Unit identification:

The serial number is tagged on unit's right side (on the left if the connections are on the unit's right side).

Information regarding unintended use:

The unit has been designed to function as a fan coil for heating and cooling applications; any other use is strictly forbidden. Installing the unit in an explosive environment is prohibited.

EN

Decommissioning:

When the unit is not used for long periods of time, it must be disconnected from the mains electrical connection.
If the unit is not used during the winter period, the water in the system may freeze. A suitable quantity of anti-freeze liquid should be mixed with the water.

Mixing the water with glycol modifies the unit's performance. Pay attention to the safety instructions on the packaging regarding glycol.

Restart after prolonged shutdown:

Before restarting:

- clean or replace the filter.
- clean the coil.
- clean or unclog the condensate drain.
- bleed the air from the hydronic system.
- it is advisable to run the unit at maximum speed and to check for abnormalities.

5.1. OPERATING LIMITS:

An installation that does not meet the specified operational limits releases Jaga NV from all liability with respect to damage to objects or people.

Briza 22 / Briza 26:

- mains voltage: 120V - 1 ph - 60Hz
- maximum water inlet temperature: 90°C - 194°F
- maximum exchanger pressure: 20 bar - 290PSI

Briza 22 HP/ Briza 26 HP:

- mains voltage: 208V - 1 ph - 60Hz
- maximum water inlet temperature: 90°C - 194°F
- maximum exchanger pressure: 20 bar - 290PSI

6. OVERVIEW

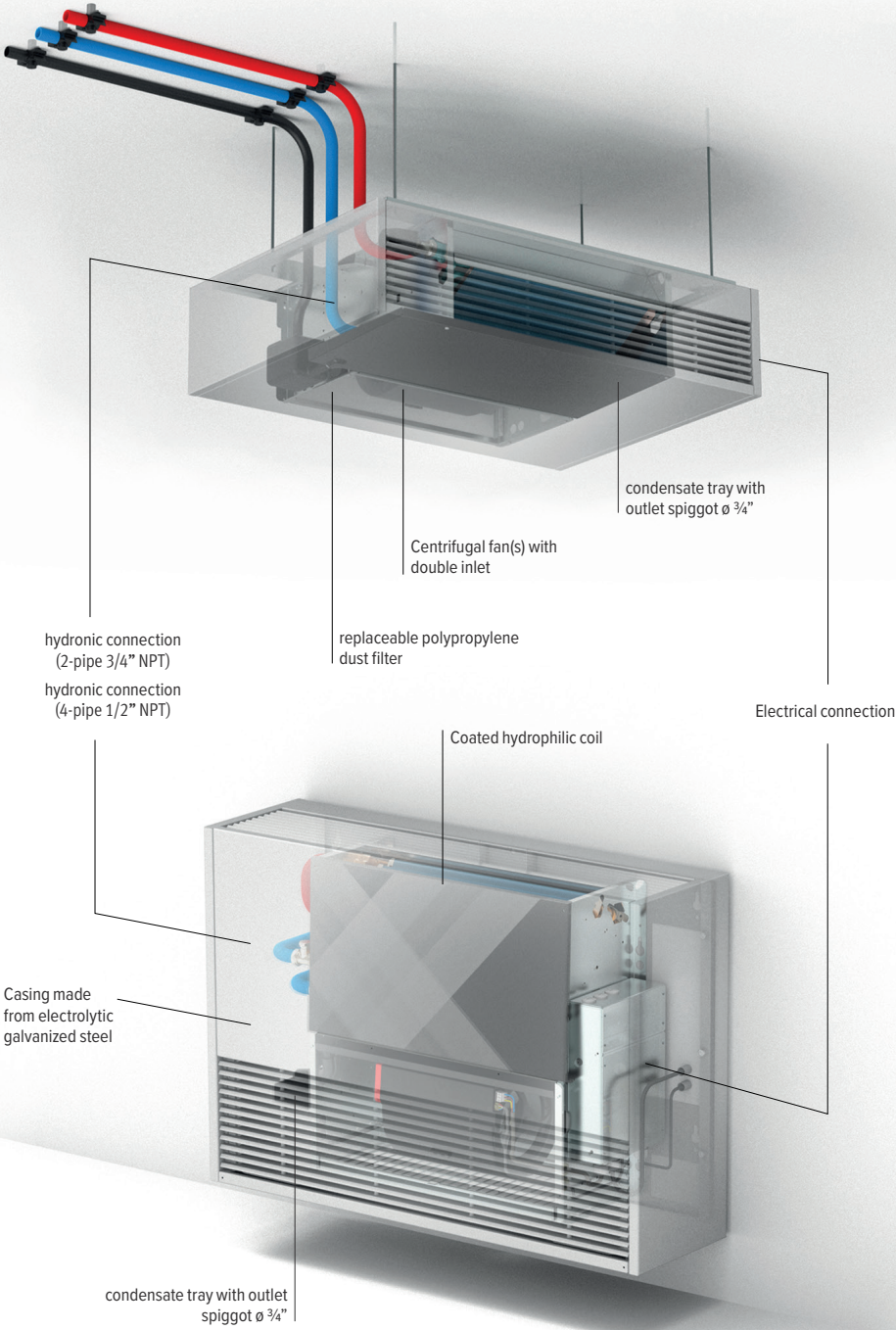
condensate tray with outlet spiggot ø ¾”
Centrifugal fan(s) with double inlet
hydronic connection (2-pipe 3/4” NPT)
hydronic connection (4-pipe 1/2” NPT)
replaceable polypropylene dust filter
Electrical connection
Coated hydrophilic coil
Casing made from electrolytic galvanized steel
condensate tray with outlet spiggot ø ¾”

7. BRIZA 22

7.1. DIMENSIONS WALL MOUNTED BRIZA 22

7.1.1. WALL MOUNTED BRIZA 22 WITH CASING

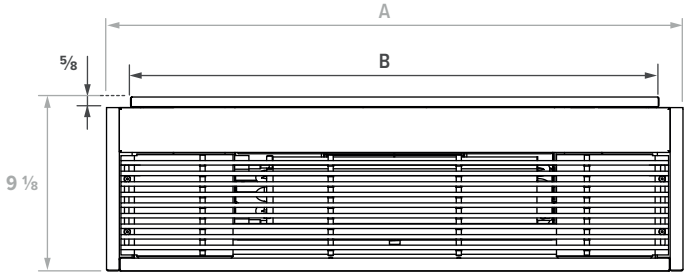

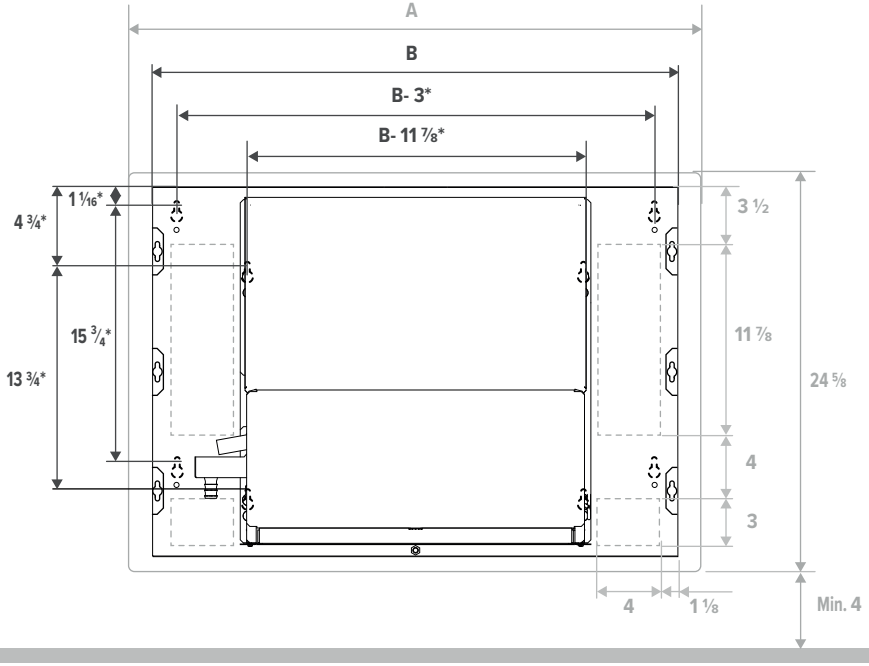

Dimensions in inches

MODEL		T2*	T3	T4	T6	T8	T10
		21 5/8 *	29 1/2	37 3/8	49 1/4	61 1/8	74 3/4
CASING	A (INCH)	35 1/2	43 1/4	51 1/4	63	74 6/8	88 5/8
BACKPLATE	B (INCH)	32 1/2	40 3/8	48 1/4	60	71 7/8	85 5/8

* NOT AVAILABLE AS HP MODEL

EN

7.1.2. BRIZA 22 BUILT-IN

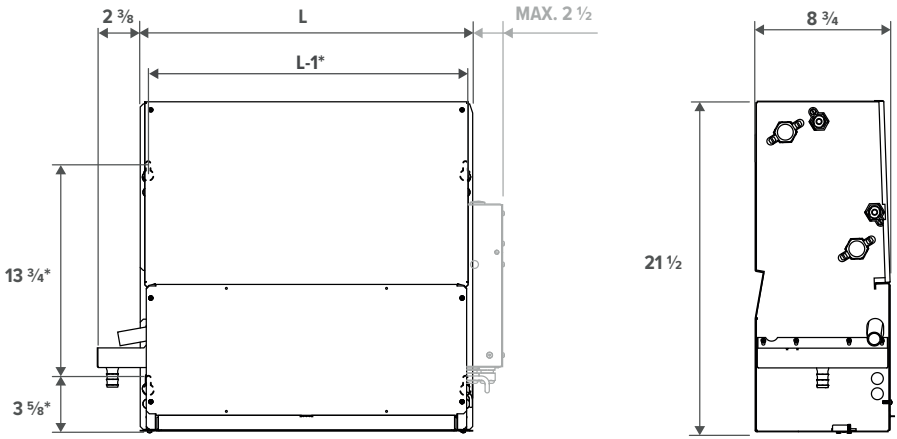

Dimensions in inches

MODEL	T2*	T3	T4	T6	T8	T10
	21 5/8 *	29 1/2	37 3/8	49 1/4	61 1/8	74 3/4
L (INCH)	21 5/8	29 1/2	37 3/8	49 1/4	61 1/8	74 3/4
WEIGHT (LBS)	37.4	47.3	59.4	78.1	96.8	121

* NOT AVAILABLE AS HP MODEL

7.1.3. MINIMAL FREE SPACE REQUIREMENTS FOR BRIZA 22 BUILT-IN

Depending on selected valves or accesories, extra space might be required.

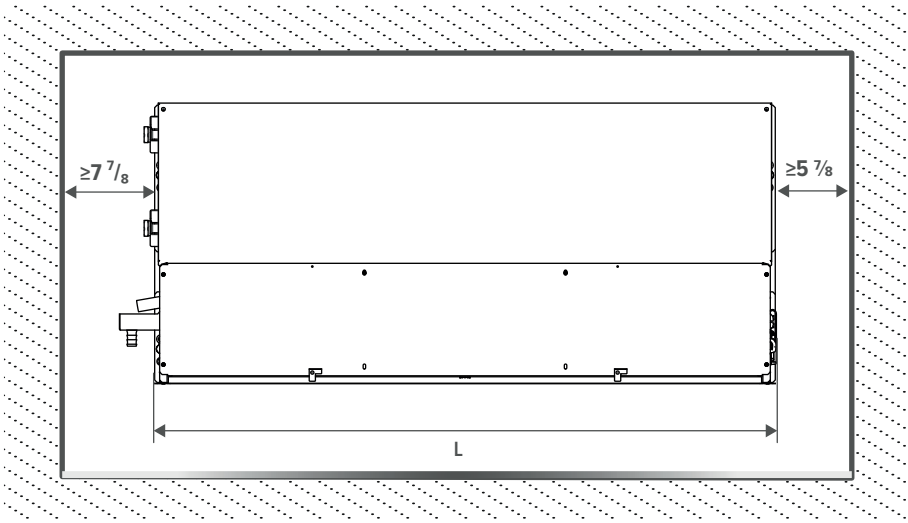

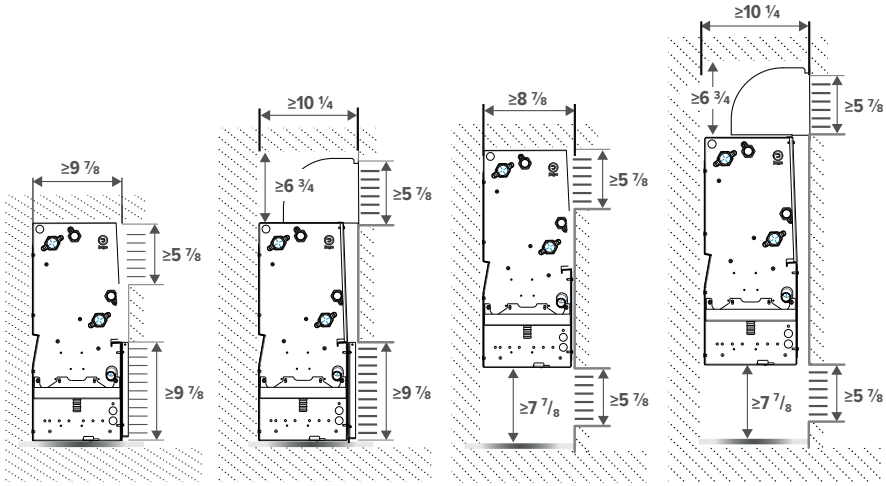

EN

7.1.4. HYDRONIC CONNECTION BRIZA 22

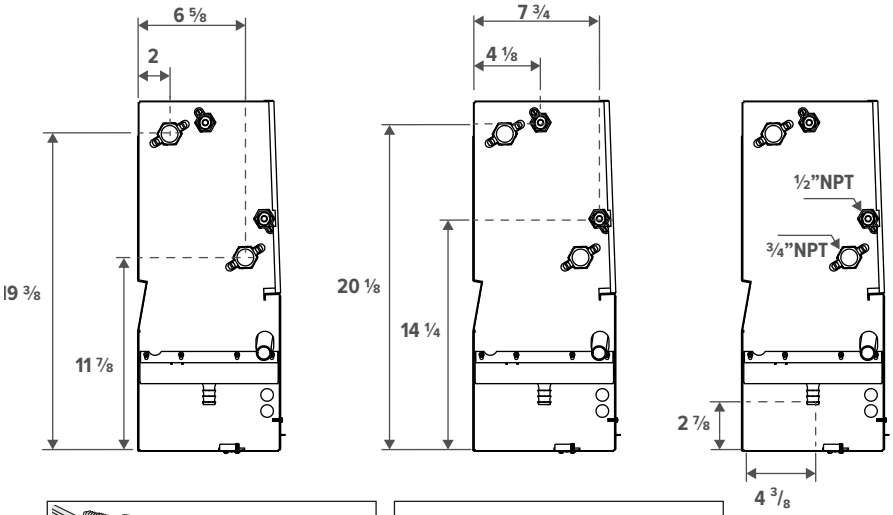

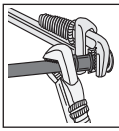

Use a back wrench when fastening the hydronic connections

Remove black plug at hydronic connection.

7.2. DIMENSIONS CEILING MOUNTED MODEL BRIZA 22

7.2.1. CEILING MOUNTED BRIZA 22 WITH CASING

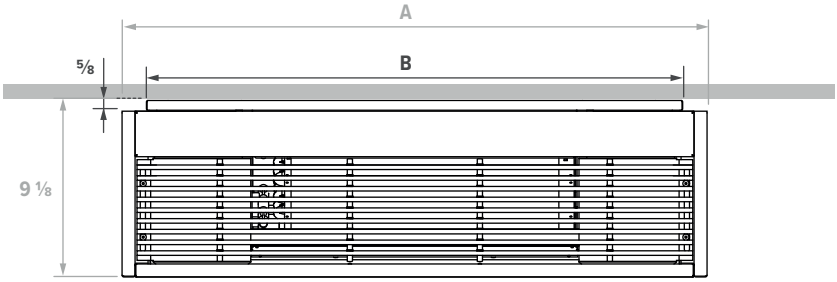

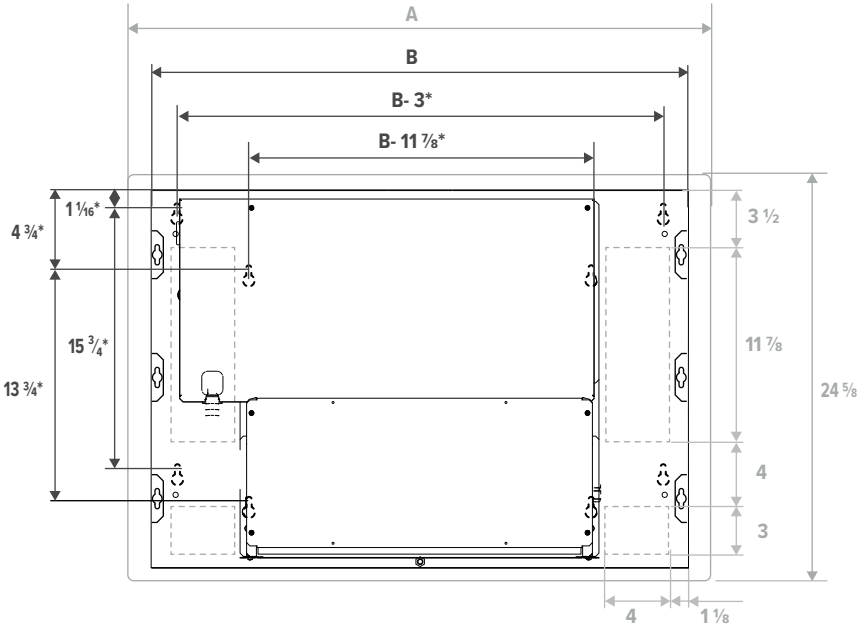

Dimensions in inches

MODEL		T2*	T3	T4	T6	T8	T10
		21 5/8 *	29 1/2	37 3/8	49 1/4	61 1/8	74 3/4
CASING	A (INCH)	35 1/2	43 1/4	51 1/4	63	74 6/8	88 5/8
BACKPLATE	B (INCH)	32 1/2	40 3/8	48 1/4	60	71 7/8	85 5/8
L(INCH)		21 5/8	29 1/2	37 3/8	49 1/4	61 1/8	74 3/4

* NOT AVAILABLE AS HP MODEL

7.2.2. BUILT-IN CEILING BRIZA 22

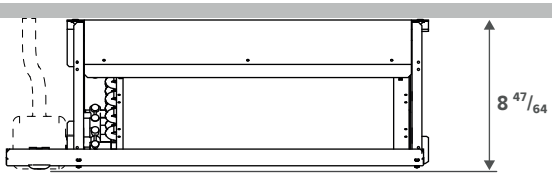

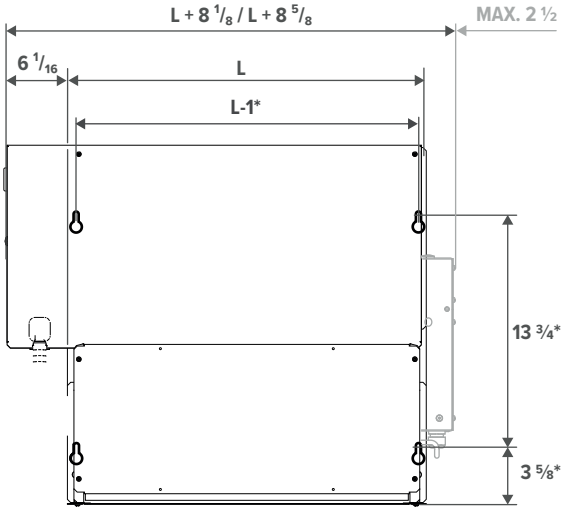

Dimensions in inches

MODEL	T2*	T3	T4	T6	T8	T10
	21 5/8 *	29 1/2	37 3/8	49 1/4	61 1/8	74 3/4
L(INCH)	21 5/8	29 1/2	37 3/8	49 1/4	61 1/8	74 3/4
WEIGHT (LBS)	37.4	47.3	59.4	78.1	96.8	121

* NOT AVAILABLE AS HP MODEL

EN

7.2.3. MINIMAL FREE SPACE REQUIREMENTS FOR BRIZA 22 BUILT-IN CEILING

Depending on selected valves or accesories, extra space might be required.

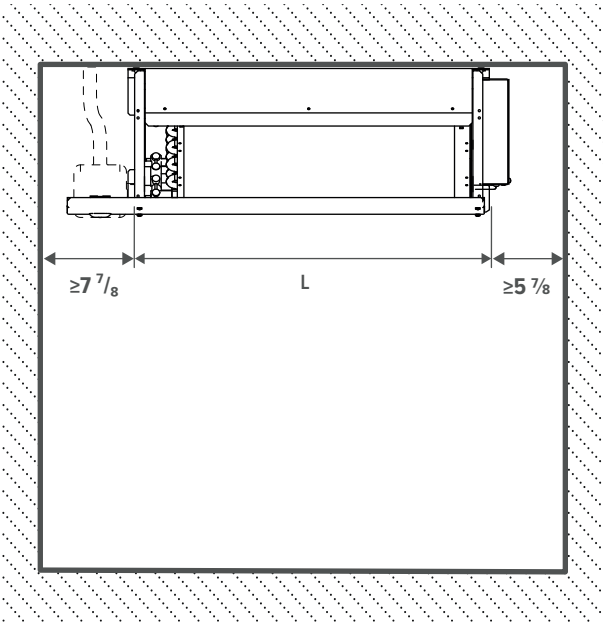

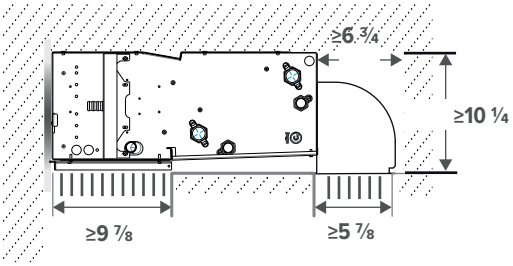

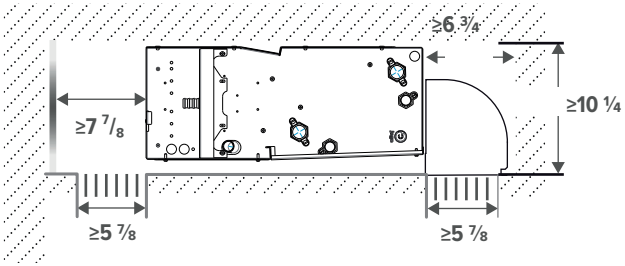

7.2.4. HYDRONIC CONNECTION

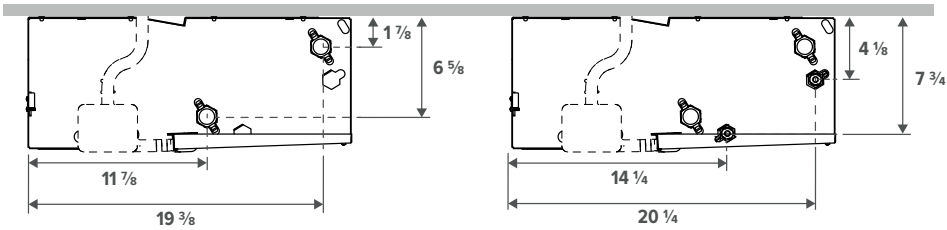

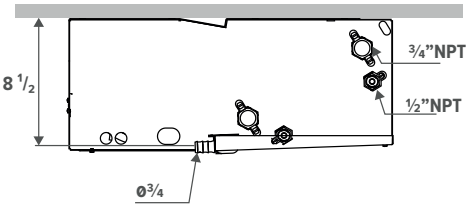

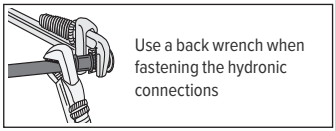

Use a back wrench when fastening the hydronic connections

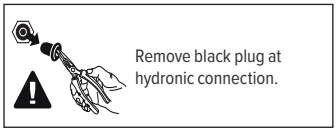

Remove black plug at hydronic connection.

EN

8. BRIZA 26

8.1. DIMENSIONS WALL MOUNTED BRIZA 26

8.1.1. WALL MOUNTED BRIZA 26 WITH CASING

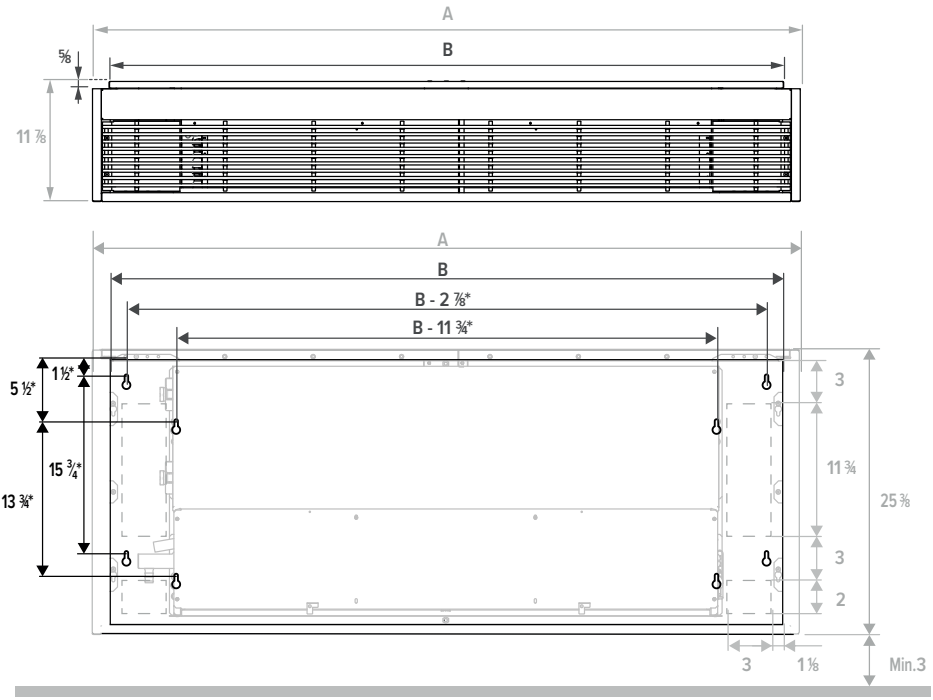

Dimensions in inches

MODEL	T6	T8	T10
	49 1/4	61 1/8	74 3/4
HEIGHT	22 1/4	22 1/4	22 1/4
WIDTH	10 3/4	10 5/8	10 5/8
LENGTH	52	63 3/4	77 5/8
A	63	74 6/8	88 1/2
B	60	71 7/8	85 5/8

8.1.2. BRIZA 26 BUILT-IN

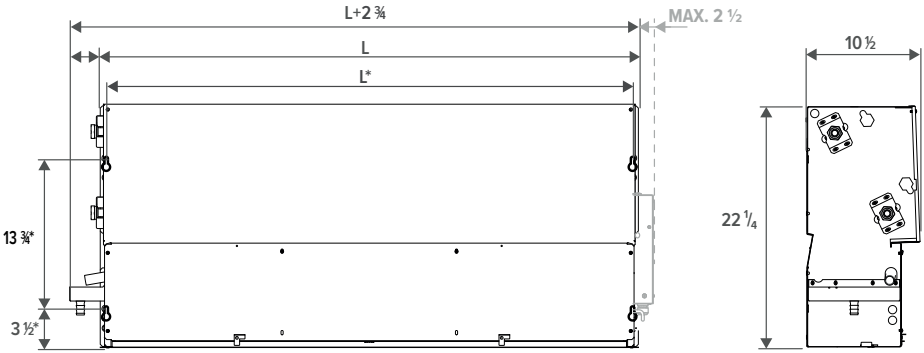

Dimensions in inches

MODEL	T6	T8	T10
	49 ¼	61 ⅛	74 ¾
L	49 ¼	61 ⅛	74 ¾

EN

8.1.3. MINIMAL FREE SPACE REQUIREMENTS FOR BRIZA 26 BUILT-IN

Depending on selected valves or accesories, extra space might be required.

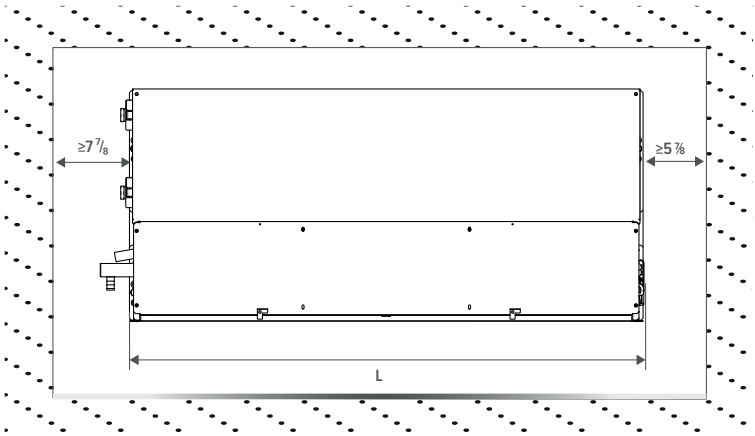

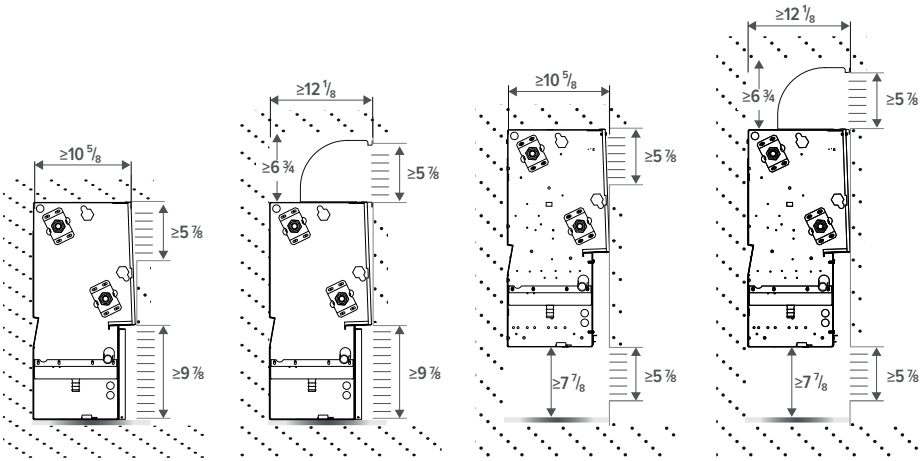

8.1.4. HYDRONIC CONNECTION

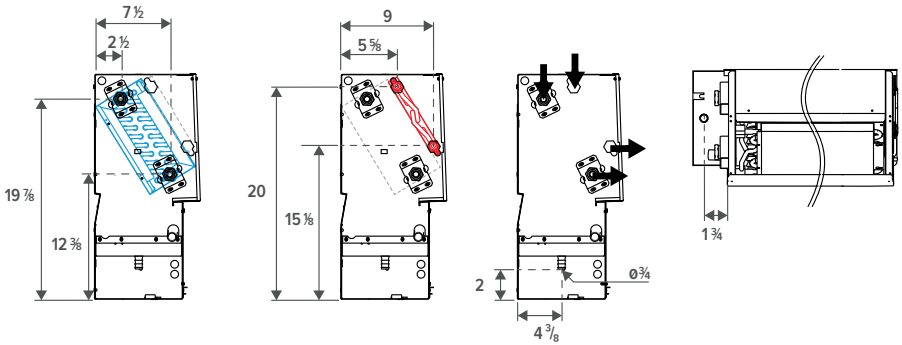

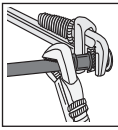

Use a back wrench when fastening the hydronic connections

Remove black plug at hydronic connection.

8.2. DIMENSIONS CEILING MOUNTED BRIZA 26

8.2.1. BUILT-IN CEILING BRIZA 26

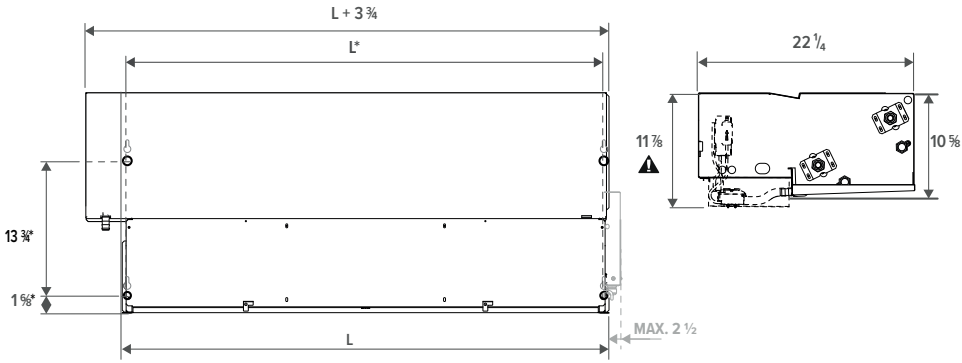

Dimensions in inches

EN

MODEL	T6	T8	T10
	49 ¼	61 ⅛	74 ¾
HEIGHT	22 ¼	22 ¼	22 ¼
WIDTH	10 ¾	10 ¾	10 ¾
LENGTH	49 ¼	61 ⅛	74 ¾

8.2.2. MINIMAL FREE SPACE REQUIREMENTS FOR BRIZA 26 BUILT-IN CEILING

Depending on selected valves or accesories, extra space might be required.

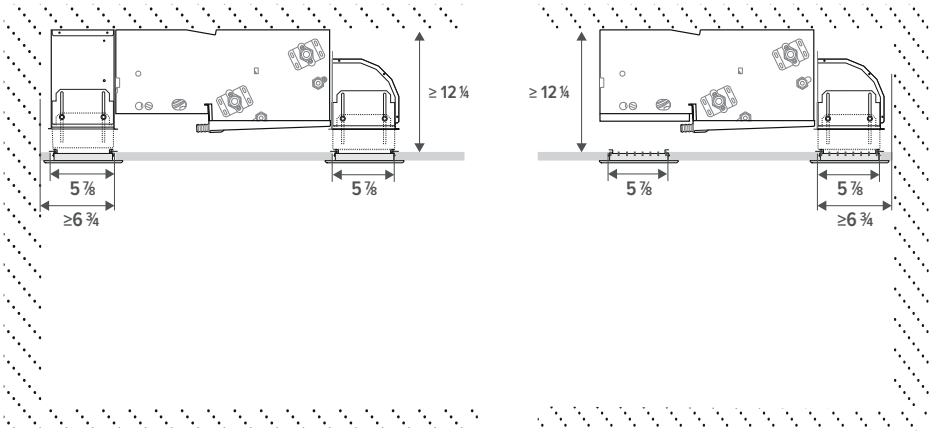

Dimensions in inches

8.2.3. HYDRONIC CONNECTION

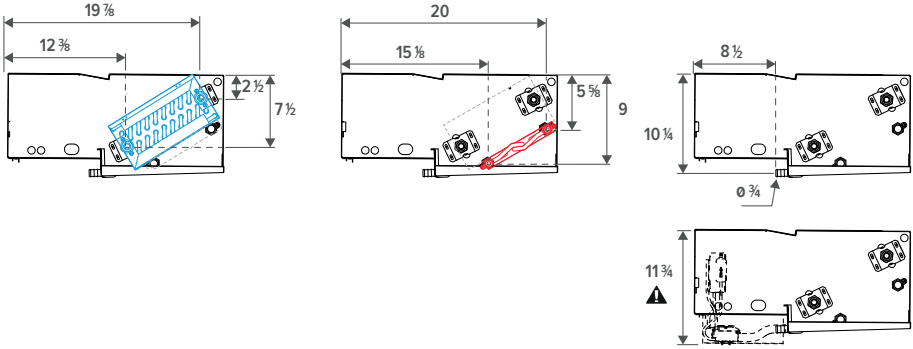

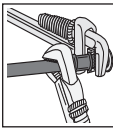

Use a back wrench when fastening the hydronic connections

Remove black plug at hydronic connection.

9. ELECTRICAL CONNECTION

ATTENTION!

– Always install a general automatic switch in a protected area near the unit, which has a characteristic delayed curve, sufficient capacity and breaking power. There must be a minimum distance of 3 mm between the contacts.

– Earth connection is compulsory by law to ensure user safety while the unit is in use.

– BRIZA 22 / BRIZA 26 : Check that the voltage and the frequency of the electrical system correspond to 120V single phase at 60 Hz; that the available installed power is sufficient for running the equipment and that the supply cables are of adequate section for the maximum current required.

– BRIZA 22 HP / BRIZA 26 HP: Check that the voltage and the frequency of the electrical system correspond to 208 V (±10%) single phase at 60 Hz; that the available installed power is sufficient for running the equipment and that the supply cables are of adequate section for the maximum current required.

– Make sure the electrical supply system complies with current National safety regulations.

– The connections must be implemented in accordance with the diagrams supplied with the unit. Cables should be selected in accordance with the local building code. Incorrect selection of the wiring can lead to safety hazards.

– If the unit is mounted on a metal surface, the earth-connection must be installed in accordance with the local regulations. The earth conductor must be longer than the other lines in order for it to be the last line to disconnect from the terminal block in case the lines start to disconnect.

EN

9.1. STANDARD

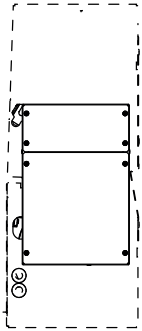

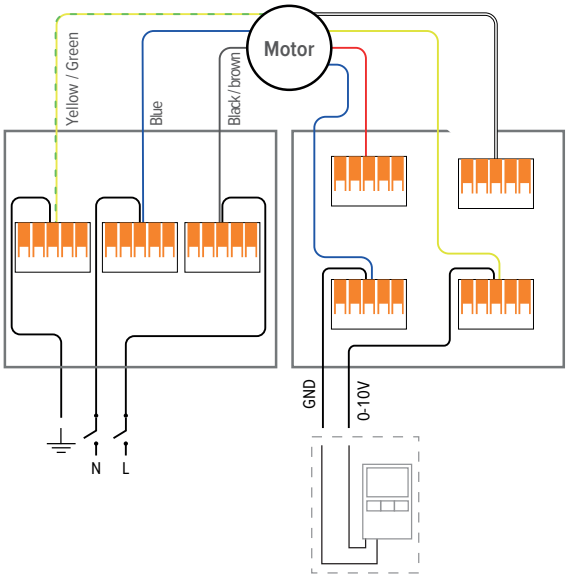

ATTENTION!

CIRCUIT BREAKER OR FUSE - MAX. 15 AMPS

TO BE PROVIDED BY THE INSTALLER. THE CIRCUIT BREAKER OR FUSE NEEDS TO PROVIDE FULL DISCONNECTION FROM THE SUPPLY MAINS IN ALL POLES UNDER OVERVOLTAGE CATEGORY III ACCORDANCE WITH THE WIRING RULES.

9.2. OPTION 1 - WIRING DIAGRAM WITH EXTERNAL CONTROL AND SWITCH

External 0 - 10V signal for fan speed modulation.

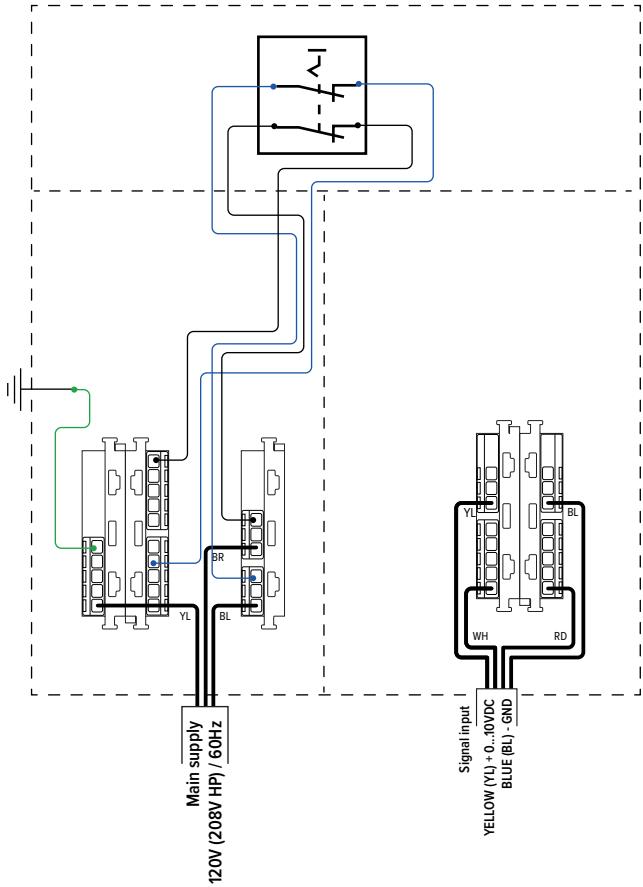

ATTENTION!

CIRCUIT BREAKER OR FUSE - MAX. 15 AMPS

TO BE PROVIDED BY THE INSTALLER. THE CIRCUIT BREAKER OR FUSE NEEDS TO PROVIDE FULL DISCONNECTION FROM THE SUPPLY MAINS IN ALL POLES UNDER OVERVOLTAGE CATEGORY III ACCORDANCE WITH THE WIRING RULES.

9.3. OPTION 2 - WIRING DIAGRAM JDPC (JAGA PRODUCT CONTROLLER)

The JDPC triggers the fan when:
– hot water temperature exceeds 82ºF (heating)
– chilled water temperature drops below 64ºF (cooling)

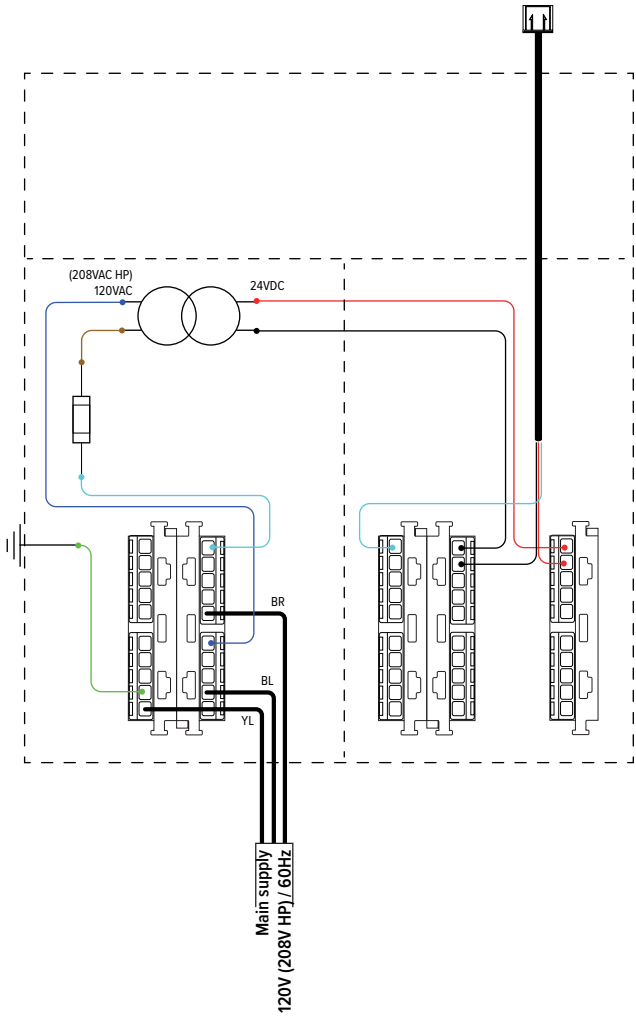

EN

ATTENTION!

CIRCUIT BREAKER OR FUSE - MAX. 15 AMPS
TO BE PROVIDED BY THE INSTALLER. THE CIRCUIT BREAKER OR FUSE NEEDS TO PROVIDE FULL DISCONNECTION FROM THE SUPPLY MAINS IN ALL POLES UNDER OVERVOLTAGE CATEGORY III ACCORDANCE WITH THE WIRING RULES.

9.4. OPTION 3- WIRING DIAGRAM EVO CONTROLLER WITH EXTERNAL THERMOSTAT AND SWITCH

EVO Controller enables 24VAC 3 OR 4speed thermostat function. Thermostat by others.

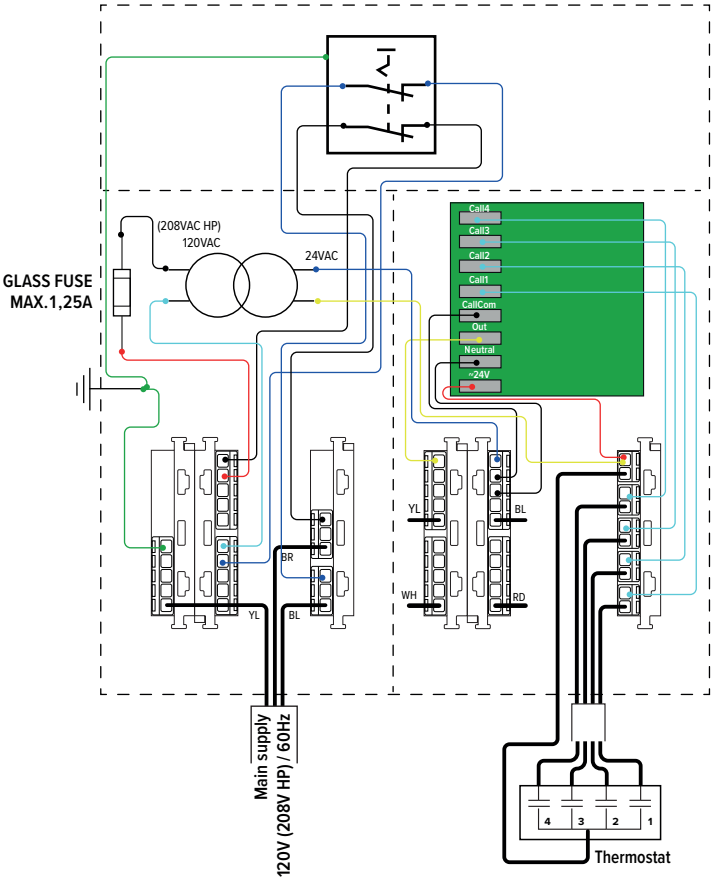

ATTENTION!

CIRCUIT BREAKER OR FUSE - MAX. 15 AMPS

TO BE PROVIDED BY THE INSTALLER. THE CIRCUIT BREAKER OR FUSE NEEDS TO PROVIDE FULL DISCONNECTION FROM THE SUPPLY MAINS IN ALL POLES UNDER OVERVOLTAGE CATEGORY III ACCORDANCE WITH THE WIRING RULES.

9.5. OPTION 4- WIRING DIAGRAM JDPC (JAGA PRODUCT CONTROLLER) WITH SWITCH

The JDPC triggers the fan when:
– hot water temperature exceeds 82ºF (heating)
– chilled water temperature drops below 64ºF (cooling)

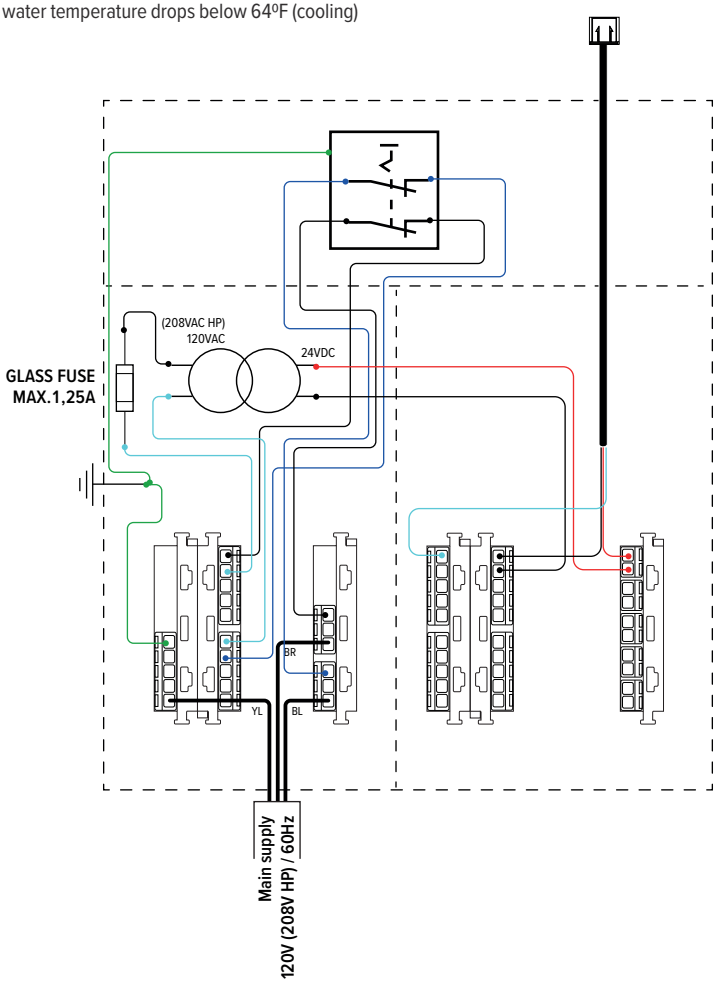

EN

ATTENTION!

CIRCUIT BREAKER OR FUSE - MAX. 15 AMPS
TO BE PROVIDED BY THE INSTALLER. THE CIRCUIT BREAKER OR FUSE NEEDS TO PROVIDE FULL DISCONNECTION FROM THE SUPPLY MAINS IN ALL POLES UNDER OVERVOLTAGE CATEGORY III ACCORDANCE WITH THE WIRING RULES.

9.6. OPTION 5- WIRING DIAGRAM WITH OPTIONAL CONDENSATE PUMP

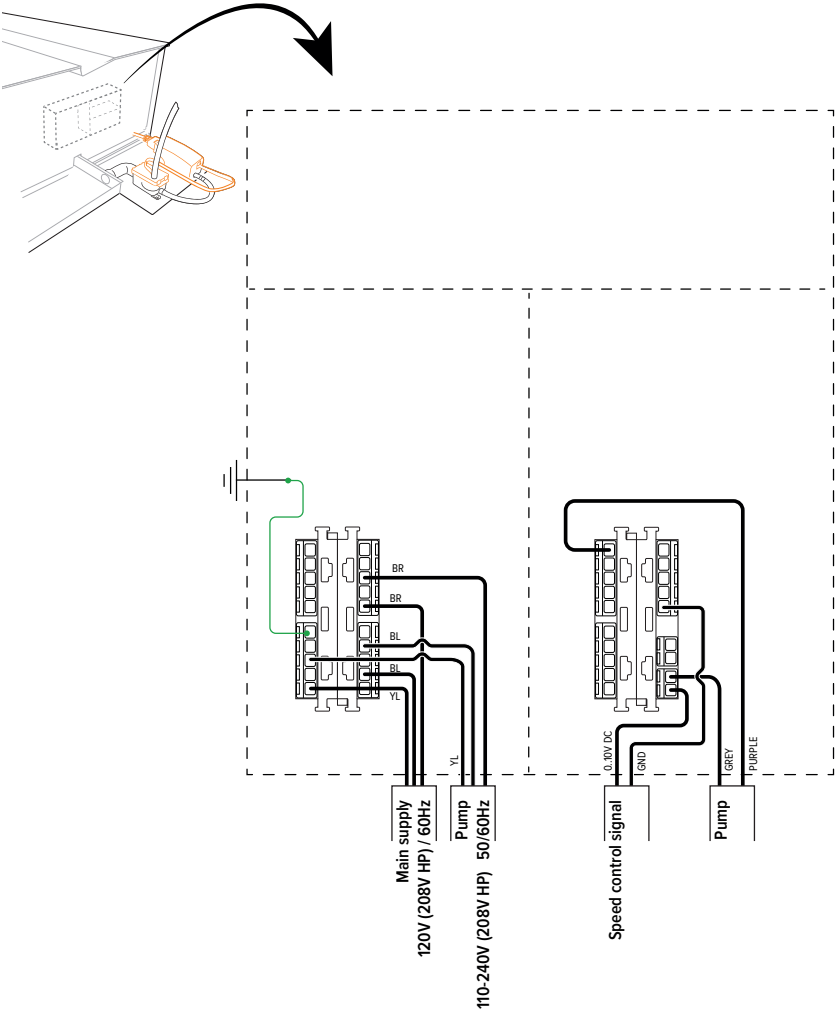

ATTENTION!

CIRCUIT BREAKER OR FUSE - MAX. 15 AMPS

TO BE PROVIDED BY THE INSTALLER. THE CIRCUIT BREAKER OR FUSE NEED TO PROVIDE FULL DISCONNECTION FROM THE SUPPLY MAINS IN ALL POLES UNDER OVERVOLTAGE CATEGORY III ACCORDANCE WITH THE WIRING RULES.

9.7. OPTION 6- WIRING DIAGRAM WITH OPTIONAL ELECTRIC HEATER

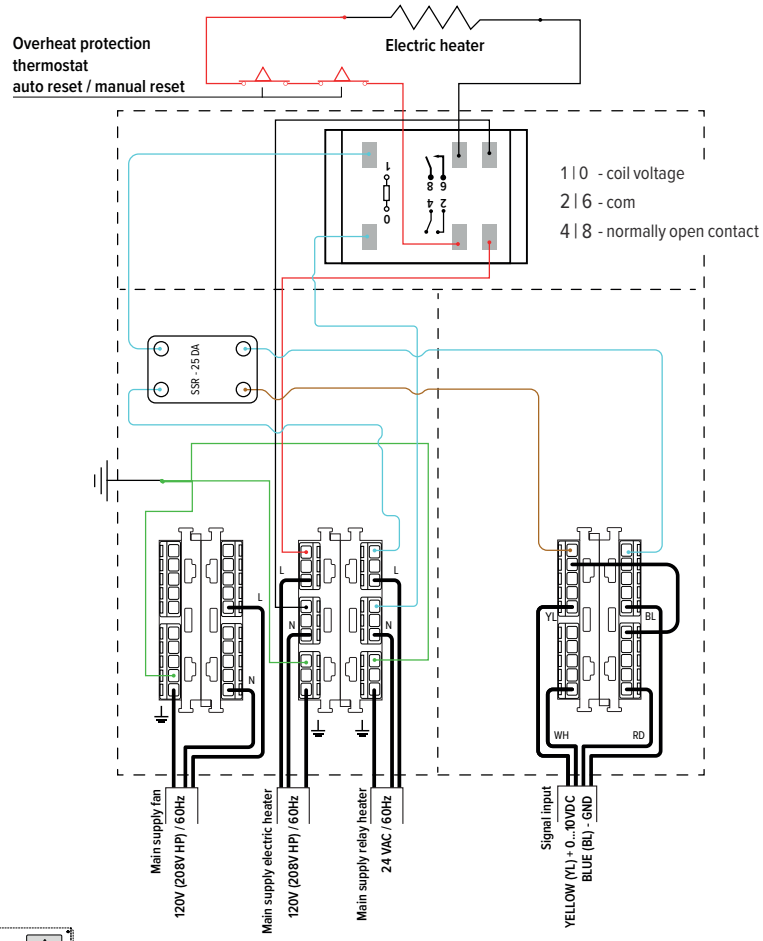

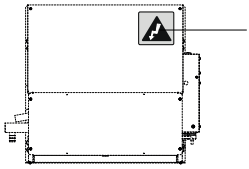

WARNING!

HAZARDOUS VOLTAGE INSIDE!
VOLTAGE OR CURRENT HAZARD SUFFICIENT TO CAUSE SHOCK. DISCONNECT POWER BEFORE SERVICING !

ATTENTION!

CIRCUIT BREAKER OR FUSE - MAX. 15 AMPS
TO BE PROVIDED BY THE INSTALLER. THE CIRCUIT BREAKER OR FUSE NEED TO PROVIDE FULL DISCONNECTION FROM THE SUPPLY MAINS IN ALL POLES UNDER OVERVOLTAGE CATEGORY III ACCORDANCE WITH THE WIRING RULES.

EN

9.7.1. INSTALLATION

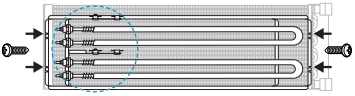

The optional electric heater is installed against the hydronic coil. The mounting slots in the electric heater correspond to the punched screw holes in the hydronic coil.

ATTENTION!

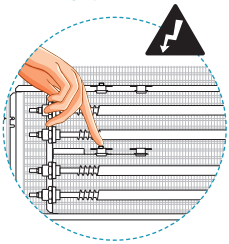

THE ELECTRIC HEATER IS EQUIPPED WITH BOTH AUTOMATIC AND MANUAL PROTECTION AGAINST OVERHEATING.

THE MANUAL PROTECTION FEATURES A BLACK BUTTON THAT NEEDS TO BE PRESSED TO RESET THE ELEMENT. REMOVE THE TOP COVER TO ACCESS THE ELECTRIC RESISTOR.

PLEASE NOTE THAT YOU SHOULD ALWAYS SWITCH OFF THE LINE VOLTAGE BEFORE OPENING THE DEVICE.

KW		1.0	1.5	2.0	2.5	3.0	4.0
VOLTAGE		120V / 208V	120V / 208V	120V / 208V	120V / 208V	208V	208V
A		8.3 / 4.8	12.5 / 7.2	16.6 / 9.6	20.8 / 12.0	14.4	19.2
AWG		14	14	14	12 / 14	14	12
MM^2		2.5	2.5	2.5	4.0 / 2.5	2.5	4.0
A (LINE FUSE)		20	20	20	30 / 20	20	30
BRIZA MODEL	120V	T2 - T3	T4	T6 - T8	T10	/	/
	208V (HP)	T3	T4	T6 - T8	T3 + T10	T4	T4 - T10

ATTENTION!

THE ELECTRIC HEATER SHOULD NOT BE ACTIVATED BEFORE THE FAN IS RUNNING!

THE AIR OUTLET GRILLE (ON THE TOP OF THE APPLIANCE) SHOULD NEVER BE COVERED OR CLOSED OFF. COVERING THE GRILL CAN DAMAGE THE APPLIANCE AND DISRUPT THE OPERATION OF THE APPLIANCE.

MAKE SURE SUPPLY AND RETURN AIR GRILLES REMAIN OPEN

9.7.2. OPERATING LIMITS FOR OPTIONAL ELECTRICAL HEATER

- The optional electrical heater requires no extra maintenance. The minimal airflow in all cases must be higher than indicated in the list below, depending on the selected size and electrical power. Periodical replacement of the filter is required to guarantee proper airflow through the unit.
- For ducted applications, the external static pressure should not exceed at. 0.12" H20 for the 120V unit or at. 0.3" H2O for the 208V HP version. A higher static pressure will result in a reduced airflow.
- Depending on the size of the fancoil and the power of the installed electrical heater, the minimal control voltage for the fan is indicated in the list below.
- A lower fan speed setting or a higher external static pressure, will result overheating the unit. When the internal temperature reaches the limit of the thermal protection, the electrical heater will be deactivated. This will result in cycling on the high limit thermal cutout and can cause failure to the electrical heater.
- Each unit is equipped with two automatic and two manual thermal protection switches. The automatic thermal protection will reset after the unit has cooled down. The manual thermal protection can only be reactivated by pressing the push button on the thermostat. This protection will only be activated when the temperature exceeds the high limit.
- Both thermal protection switches are safety features only and should never be activated in normal operations.
- Activation of a thermal protection indicates a problem in the installation and must be followed up by a technician.
- The electrical installation of the product must be carried out by a qualified technician and with respect to the local building codes. Circuit breakers and wiring must be sized depending on the amperage drawn by the electrical heater plus the fan.

EN

BRIZA 22 / BRIZA 26 - 120 V (NON DUCTED MAX 0.12"H20)				
MIN INPUT (V)	1 KW	1,5 KW	2 KW	2,5 KW
T2 120 V	6 V			
T3 120 V	6 V			
T4 120 V		6 V		
T6 120 V			6 V	
T8 120 V			6 V	
T10 120 V				6 V

BRIZA 22 HP / BRIZA 26 HP - 208 V (DUCTED MAX 0.3"H20)						
MIN INPUT (V)	1 KW	1,5 KW	2 KW	2,5 KW	3 KW	4 KW
T3 208 V HP	5 V			6 V		
T4 208 V HP		5 V			6 V	7 V
T6 208 V HP			5 V			6 V
T8 208 V HP			5 V			6 V
T10 208 V HP				5 V		6 V

BRIZA 22 / BRIZA 26 - 120 V (NON DUCTED MAX 0.12"H20)				
MIN INPUT (V)	1 KW	1,5 KW	2 KW	2,5 KW
T2 120 V	213 CFM			
T3 120 V	174 CFM			
T4 120 V		234 CFM		
T6 120 V			379 CFM	
T8 120 V			394 CFM	
T10 120 V				529 CFM

BRIZA 22 HP / BRIZA 26 HP - 208 V (DUCTED MAX 0.3"H20)						
MIN INPUT (V)	1 KW	1,5 KW	2 KW	2,5 KW	3 KW	4 KW
T3 208 V HP	169 CFM			348 CFM		
T4 208 V HP		242 CFM			470 CFM	599 CFM
T6 208 V HP			269 CFM			524 CFM
T8 208 V HP			437 CFM			809 CFM
T10 208 V HP				416 CFM		908 CFM

10. OPERATING LIMITS

When chilled water flows through the unit, the coil may form condensate, which will drain through the drainpan. However, under extreme conditions where the chilled water is very cold and the relative humidity is very high, there is a risk of condensation forming on the exterior of the unit. This can cause damage to the surrounding area. To prevent this, it is recommended to maintain a minimum water temperature based on relative humidity. The following table shows the absolute lowest water temperatures allowed to avoid condensation:

		AMBIENT TEMPERATURE / DRY BULB TEMPERATURE (°F)					
		69.8 °F	73.4 °F	77 °F	80.6 °F	84.2 °F	87.8 °F
RH (%)	40 %	37.4 °F	37.4 °F	37.4 °F	37.4 °F	37.4 °F	39.2 °F
	50 %	37.4 °F	37.4 °F	37.4 °F	37.4 °F	39.2 °F	42.8 °F
	60 %	37.4 °F	37.4 °F	39.2 °F	39.2 °F	42.8 °F	46.4 °F
	70 %	37.4 °F	39.2 °F	41 °F	42.8 °F	46.4 °F	50 °F
	80 %	39.2 °F	41 °F	42.8 °F	46.4 °F	50 °F	/
	90 %	41 °F	42.8 °F	46.4 °F	50 °F	/	/
	100 %	42.8 °F	46.4 °F	50 °F	/	/	/

Permitted minimum water temperature

ATTENTION!

HP appliances are only intended to be combined with air ducts, high air flow rates and/or specific air filters. They must be dimensioned and controlled with a control voltage above 5V. At a lower control voltage, disturbing commutation noises can occur.

11. INSTALLATION

Installation must be carried out by certified technicians. Incorrect installation could cause product failure, a reduced performance or an increased noise level.

Always use the main switch to isolate the power supply

The unit has sharp edges; always wear gloves.

ATTENTION! The device must remain accessible at all times for maintenance. in the case of Bottom or ceiling installation, the enclosure must always be disassembled for service purposes.

... With casing ... Built-in

11.1. WALL MOUNTED MODEL

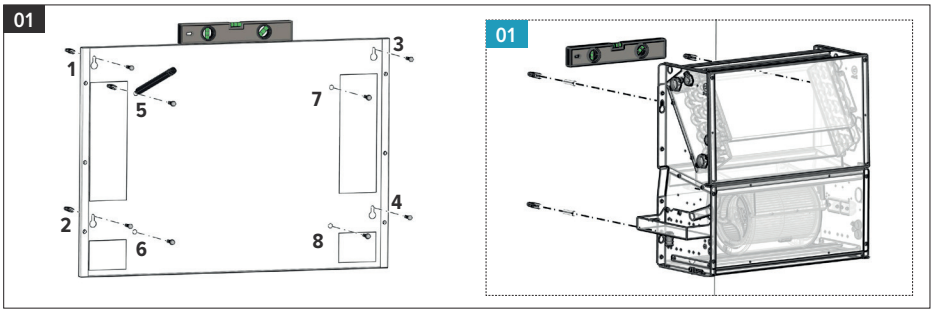

Mark and drill the mounting holes for the back plate and the device (1-8).

BUILT-IN: Mark and drill the mounting holes for the the device.

Make sure that the wall is level and has sufficient loadbearing capacity! The type of wall determines which type of screw or plug must be used.

Take the indicated free space around the device into account

From model 06: 2 additional drill holes!

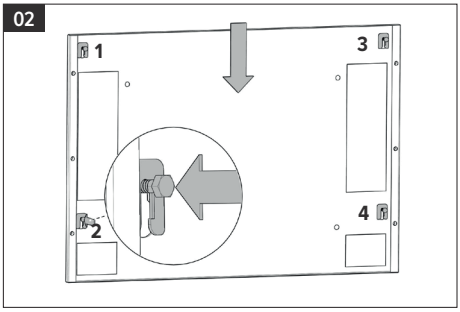

1. Insert the screws of the back plate (1-4) and let them stick out 1 cm.
2. Install the back plate.
3. Tighten the screws.

From model 06: 2 additional drill holes!

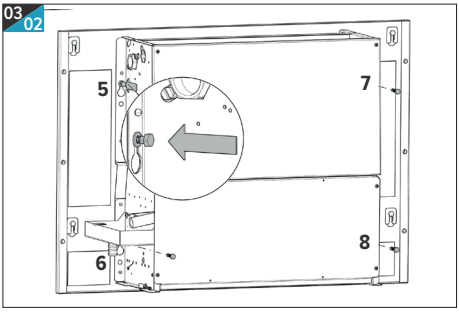

1. Place the screws of the device(5-8) and let them stick out 1 cm.
2. Place the device in the correct position.
3. Tighten the screws.

EN

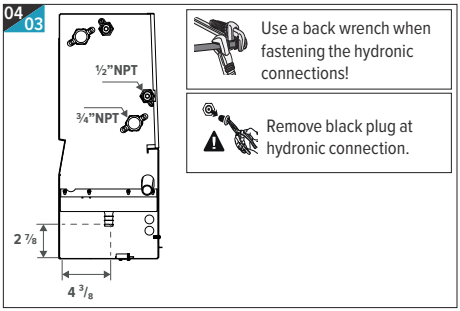

Connect the device to the hydronic system by using the specified inlet/outlet connections. Make sure that the connections are air tight - use a sealant. The coil is equipped with an air vent..

Install the condensate drain.

⚠ Make sure that the condensation water is drained quickly. Keep the condensation drain clean and remove obstacles that can prevent normal drainage.

⚠ Coils can be partially drained; it is recommended to bleed air inside the coil to be drained completely.

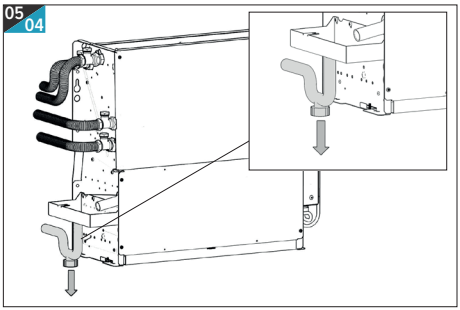

The condensate drain system must be set up with an adequate p-trap in order to prevent odours. The p-trap can be located at the terminal unit or at the final condensate connection (downline from the fan coil).
Pour water into the drain pan and check if it is drained properly. Otherwise, check the slope and look for possible blockages.

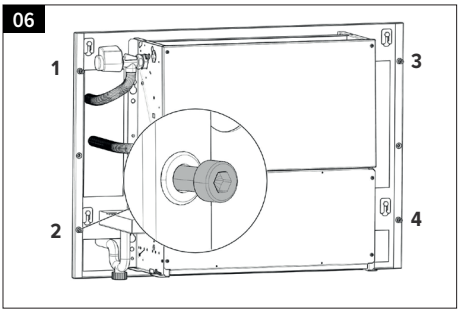

Install the support bolts in the back plate.

⚠ Let the bolts stick out 1 cm.

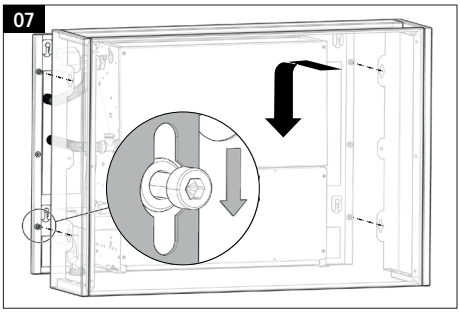

1. Mount the casing. Make sure the mounting holes are in line with the support bolts.
2. Fix the casing by tightening the support bolts.

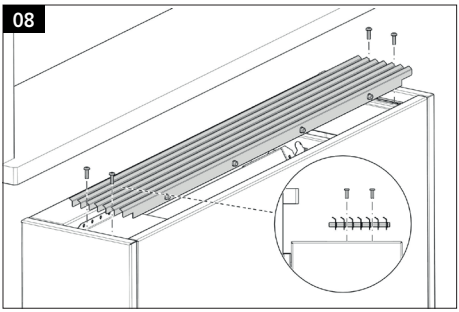

Install the grille. Put the screws in the mounting holes.

⚠ Ideally, the air is blown towards the wall.

⚠ **Do not cover the grilles, especially not with the optional electric heater!**

11.2. CEILING MOUNTED MODEL

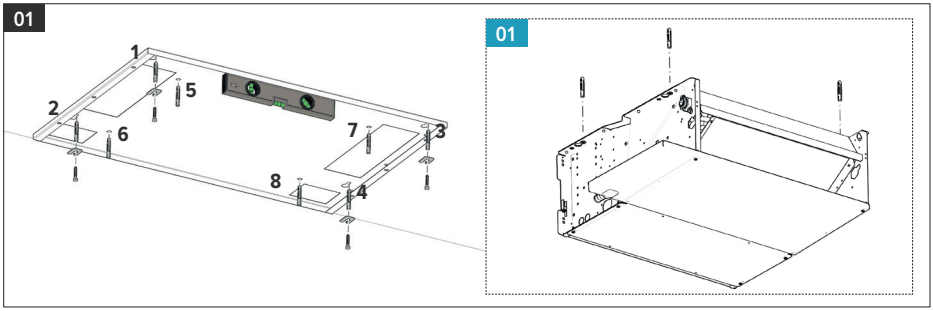

Mark and drill the mounting holes for the back plate and the device (1-8).

BUILT-IN: Mark and drill the mounting holes for the the device.

⚠ Make sure that the wall is level and has sufficient loadbearing capacity! The type of wall determines which type of screw or plug must be used.

⚠ Take the indicated free space around the device into account

⚠ From model 06: 2 additional drill holes!

EN

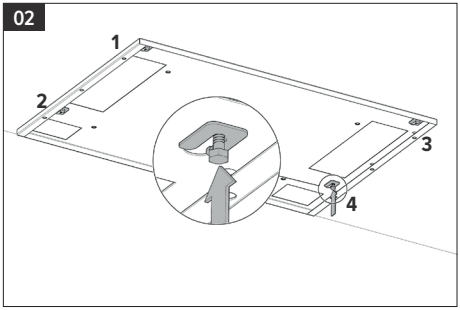

1. Insert the screws of the back plate (1-4) and let them stick out 1 cm.
2. Install the back plate.
3. Tighten the screws.

⚠ From model 06: 2 additional drill holes!

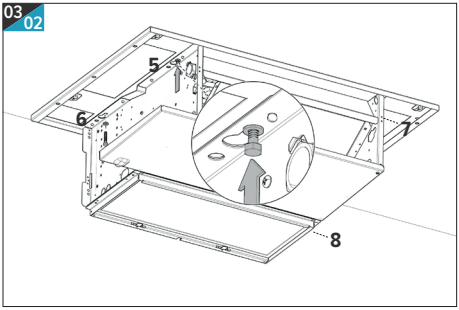

1. Place the screws of the device(5-8) and let them stick out 1 cm.
2. Place the device in the correct position.
3. Tighten the screws.

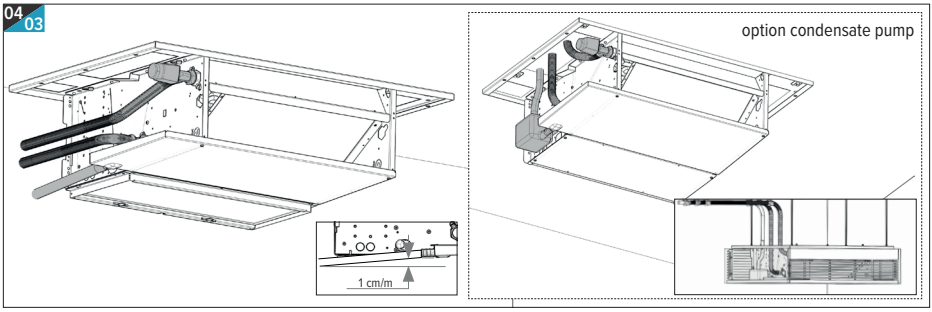

Make the hydronic connection.

Connect the device to the hydronic system by using the specified inlet/outlet connections. Make sure that the connections are air tight - use a sealant. The coil heat exchanger is equipped with an air vent..

Install the condensate drain.

Make sure that the condensation water is drained quickly. Keep the condensation drain clean and remove obstacles that can prevent normal drainage.

Coils can be partially drained; it is recommended to bleed air inside the coil to be drained completely.

If there is not enough space in the ceiling for the hydronic connections, fix the unit (back plate) to spacers (e.g., threaded rods).

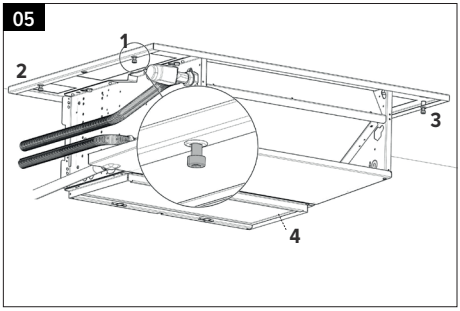

Install the support bolts in the back plate.

Let the bolts stick out 1 cm.

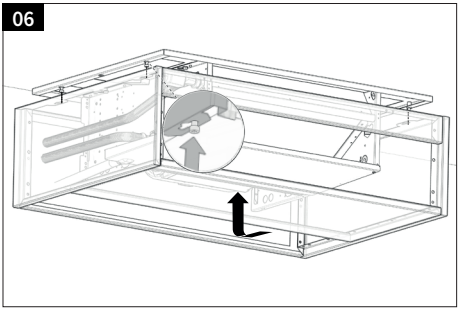

1. Mount the casing. Make sure the mounting holes are in line with the support bolts.
2. Fix the casing by tightening the support bolts.

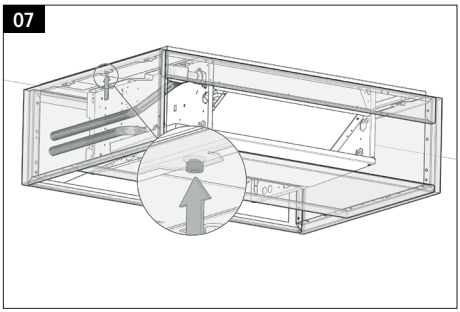

Ceiling mounted model: place the middle screw and tighten!

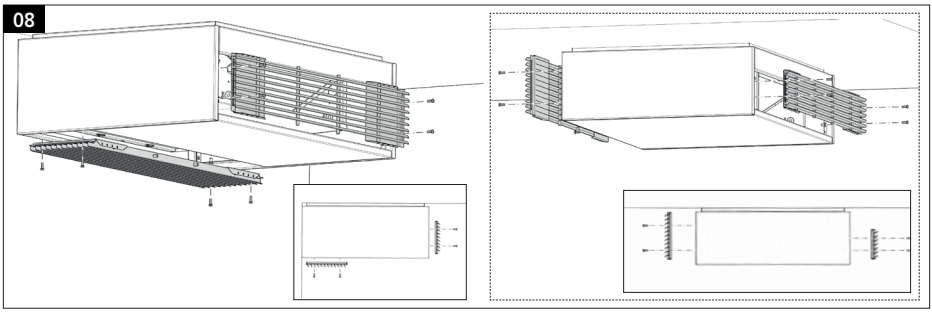

Install the grille. Put the screws in the mounting holes.

12. FILTER REPLACEMENT

MODEL		02	03	04	06	08	10
CODE	FT / FF	8721.501	8721.502	8721.503	8721.504	8721.505	8721.506
	BT / BF	8721.601	8721.602	8721.603	8721.604	8721.605	8721.606

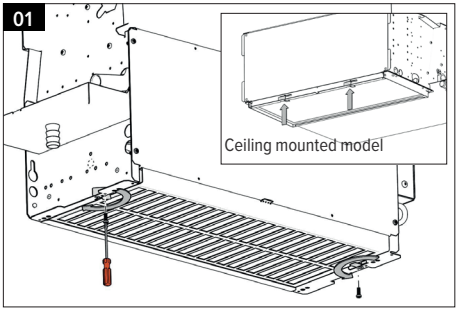

Remove the screw and open the locks on the side of the device.

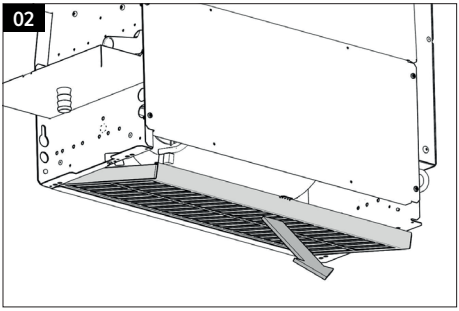

Take the filter out of the unit.

EN

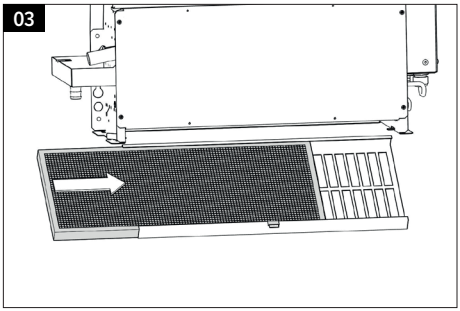

Replace the filter.

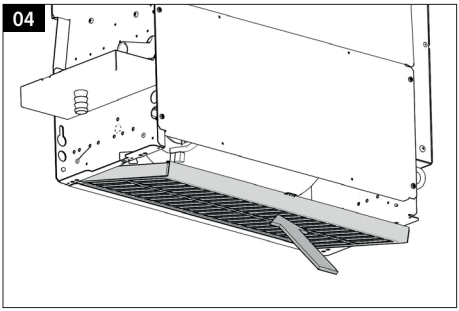

Place the new filter in the unit.

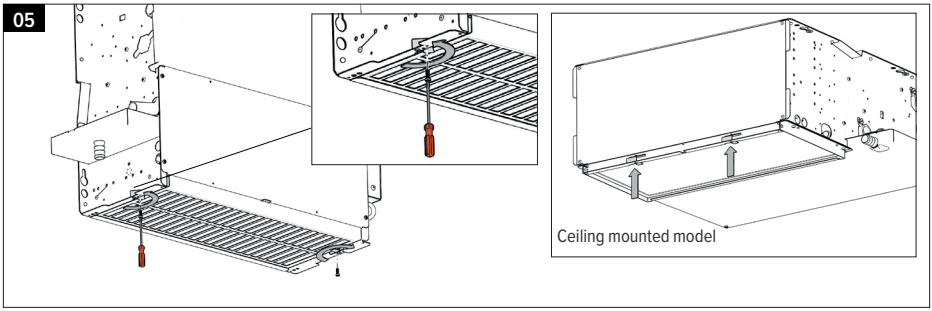

Relock the filter by turning the locks and replace the screw.

13. SPECIAL MAINTENANCE: REPLACING THE FAN

If the fan's electric motor is defective, the entire fan unit must be replaced.

Always use the main switch to disconnect the power to the fan!

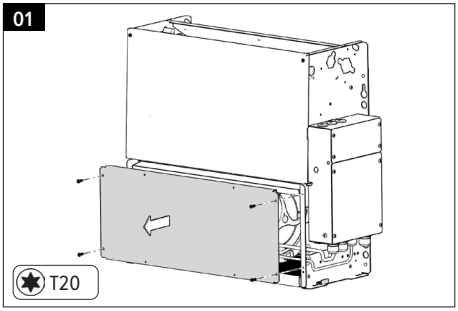

Unscrew the 4 screws from the lower front panel and remove this panel.

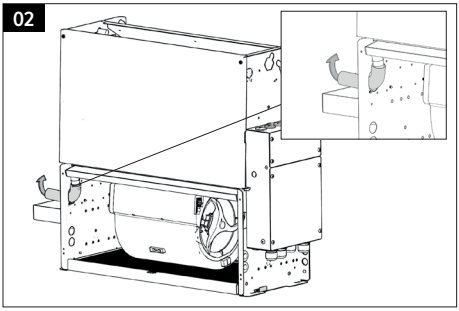

Detach the small rubber pipe from the condensate drain.

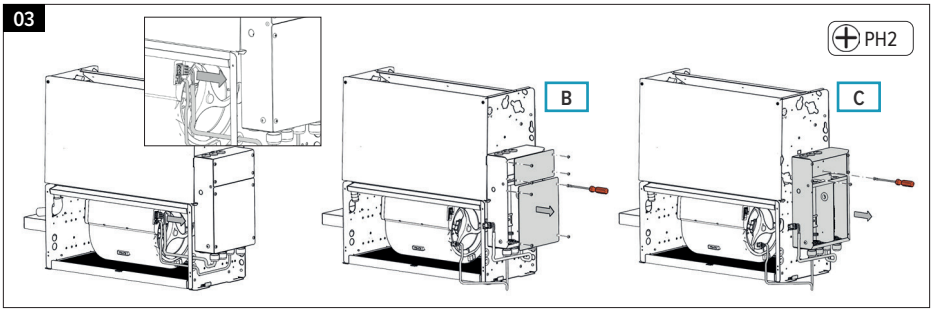

Disconnect the electrical cable from the motor/ fan. B and C* Only applicable when a large junction box is installed in combination with fan control options or switch.

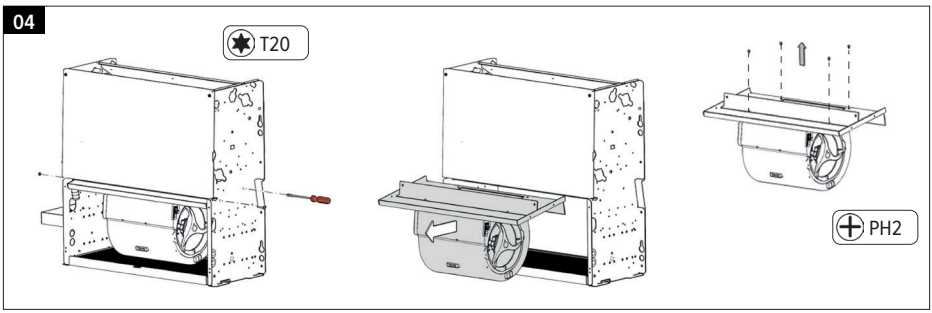

Remove the 4 screws that fix the fan plate to the unit.
Remove the motor from the plate by loosening the 4 screws.

05 Follow the instructions in reverse order to mount the new fan / motor.

14. SPECIAL MAINTENANCE: REPLACING THE HEAT EXCHANGER

Always use the main switch to disconnect the power to the fan!

01

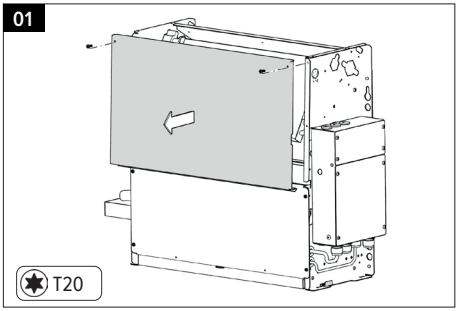

Remove the 2 screws from the upper front panel and remove the panel.

02

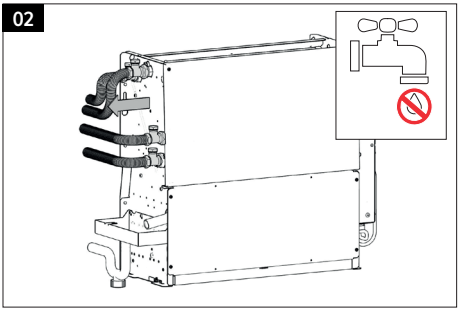

Shut off the water supply and return.
w

EN

03

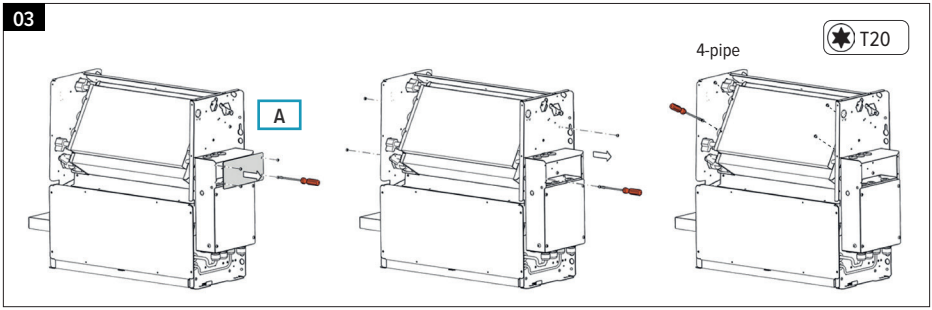

2-pipe: Remove the 4 screws on the side that fix the heat exchanger to the unit. A* Only applicable when a large junction box is installed in combination with fan control options or switch.
4-pipe: Remove the 4 screws that fix the heat exchanger to the unit.

04 Follow the instructions in reverse order to mount the new fan / motor.

15. INITIAL START-UP

IMPORTANT!
Start-up and Commissioning of the fancoil must be carried out by skilled staff, qualified to work on this type of product.

DANGER!
Before start-up, make sure the installation has been carried out in compliance with in this manual.

Before start-up the fancoil unit, check if:
1. the unit is positioned correctly
2. the supply and return pipes are properly connected and insulated
3. the pipes are clean and air is removed
4. the inclination of the unit towards the drain and the p-trap are correct
5. the coils are clean
6. the wiring connections are correct and properly tightened
7. the supply voltage is correct
8. the electric power consumption is correct and does not exceed the maximum value indicated in the catalog

16. MAINTENANCE

DANGER!
– maintenance must be carried out by qualified technicians.
– do not insert sharp objects into the supply and return grilles
the unit has sharp edges; use gloves during maintenance!

DANGER!
Always use the main disconnect switch to isolate the unit from the mains before carrying out any maintenance or inspection work. Make sure that no one accidentally turns on the power to the unit; lock the master switch in the off position.

16.1. SPECIAL NOTE

Maintenance and cleaning of the stainless steel protection grille:
a dirty grille obstructs the air flow, so clean the grille at regular intervals, depending on the room's purpose and how it's used. The grille should never be disassembled for maintenance and can be easily cleaned by using a vacuum cleaner.

Cleaning the unit:
always disconnect the power supply before servicing the fan!!
– cleaning at regular intervals is important, depending on the room's purpose and how it's used
– clean with a vacuum cleaner or air compressor. Do not use solvent- or detergent based products.

16.2. ROUTINE MAINTENANCE

Every 6 months: Check the condition of the coil and condensate drain:
If necessary:
– remove any dirt from the coil surface
– remove dust using an air compressor
– wash with water and brush gently
– dry by using compressed air
– keep the condensate drain free from any obstructions that may prevent normal water flow

Bleed air from the system.

1. start the circulation pump and open the supply valve for a few minutes.
2. stop the circulation pump.
3. loosen the vent screw on the inlet collector and bleed the air.
4. repeat steps 1 to 3 until there is no more air escaping the system

16.3. ELECTRICAL CIRCUIT

The following steps are recommended to perform maintenance on the electrical circuit:

– check the unit's power consumption using a clip-on meter and compare the reading with the values shown in the documentation;
– inspect the electrical contacts for corrosion and loose wires.

17. WARRANTY

The fan coil unit is intended strictly for conditioning the indoor climate. Any unintended use is strictly forbidden and voids all warranty on the product. Installation, maintenance and operation of the unit is only allowed for authorized staff.

Please follow these instructions carefully

The warranty is void when:

– the installation procedure has not been followed,
– the fan coil has not been periodically cleaned,
– the unit has been used in an improper or irresponsible manner,
– repairs have been carried out by others than Jaga,
– product modifications have been carried out by others, before or after the installation,
– the product is not accessible for cleaning or maintenance.

If you have any questions or complaints, please contact your supplier or installer. The copyright of these instructions is the property of Jaga.

18. DISSASSEMBLY INSTRUCTIONS

SAFEGUARD THE ENVIROMENT

Jaga cares about protecting the environment.

When the unit is dismantled it is important to strictly follow these procedures:

– the unit must be dismantled by a firm that is authorized to dispose of scrap machinery/products

The unit as a whole is composed of secondary raw materials and the following conditions must be met:

– if the unit contains antifreeze, then dispose of the antifreeze as indicated in the glycol supplier's instructions.
– the electronic components are considered special waste, and must be recycled as such
– the pipe insulation and the sound-absorbing lining must be removed and processed as urban waste

Please follow and file these instructions!

19. REFERENCE STANDARDS

UL STD 1995 **CSA C22.2 NO. 236**	Safety standard for heating and cooling equipment
UNI EN 292	Safety of machinery. Basic concepts, general principles for design
UNI EN 294	Safety of machinery. Safety distances to prevent danger zones being reached by the upper limbs.
UNI EN 563	Safety of machinery. Temperature of contact surfaces. Ergonomic data to establish limit values for temperatures of hot surfaces.
UNI EN 1050	Safety of machinery. Principles of risk assessment.
UNI 10893	Product technical documentation. User instructions
EN 13133	Specifies basic requirements essential to the brazing process, test conditions, assessment and certificates
EN 378-1	Refrigerating systems and heat pumps. Safety and environmental requirements.
PREN 378-2	Refrigerating systems and heat pumps. Design, construction, testing, marking and documentation.
IEC EN 60335-2-40	Particular requirements for electrical heat pumps, air-conditioners and dehumidifiers.
UNI EN **ISO 3741** **ISO 5135** **EUROVENT 8/2-1992**	Acoustics.This is the rule used to determine the sound power level measuring the sound pressure level in free field uttered by a noise source nonpunctiform, lied on a surface that reflects acoustically.
EN 50081-1:1992	Electromagnetic compatibility, generic emission standard. Part 1: residential, commercial and light industry.

NOTES

DECLARATION OF CONFORMITY

CEO JAGA N.V.
Jan Kriekels

08/02/2022

JAGA N.V. - Verbindingslaan 16 - B 3590, declares under its sole responsibility that the product to which this declaration relates: **BRIZA**
is in conformity with the following standards or documents provided that these are used in accordance with our instructions: **NBN EN 60335-1 BASED ON EN 60335-1:2012 + A11:2014 + A12:2017 + A13:2017 + A1:2019 + A2:2019 + A14:2019 / NBN EN 60335-2-80 BASED ON EN 60335-2-80:2003 + A1:2004 + A2:2009**

Following the provision of Directives as amended:

- **Low Voltage 2014/35/EC**
- **EMC 2014/30/EC**
- **Machinery 2006/42/EC**
- **RoHS 2011/65/EU**

1387
CEBEC

jaga

CLIMATE DESIGNERS

Jaga Canada Climate Systems
www.jaga-canada.com

27200.20000071
6 november 2024, 11:31 - Jaga Inc.